SUZOHAPP

Coin carousel WGR

High performance coins storage and payout

The coin carousel WGR has 2 specific functions. It not only stores coins but acts as an escrow to return rejected coins and serves as a payout mechanism. The escrow returns coins already entered, acting as Last-In/First-out (LiFo) mechanism. The WGR is powered by a bidirectional drive motor and the coins are taken by an electromechanical shutter. The current motor position (which is correspondingly the current compartment position) and the shutter position are both monitored by a slotted optical switch. To recognized coins, the entrance is monitored by 3 light barriers. The major design innovation of the WGR is the carousel with 53 compartments in which 50 entered coins can be stored. The carousel's mechanical design allows all coin handling to take place within this unit. The modular design of the WGR allows several carousels to be placed on top of each other by using a simple rack construction in a complete coin storage and payout system.

LiFo (Last-in/First-out) function

Features

- LiFo (Last-In/First-Out) function
- Coin overflow to the cash box
- 3 optical sensors for coin entry, motor and shutter position
- 3 coin channels for acceptance, overflow and reject
- Easy way to insert several WGR carrousels on top of each other to form a coin handling system. Each separate coin value is thus assigned to a separate magazine. A CPU controls the whole process and drives the magazines (available as option)
- If all compartments are full, then the coin that was first accepted reaches the overflow opening in the base of the WGR, and consequently falls through the opening when the next coin enters the magazine. As each magazine is placed directly on top of each other, the coin will fall through the magazine under it and thus into the cashbox. A coin exit sensor is inserted underneath the magazines to ensure that the CPU is informed of any misrouted coin (available as option)

Possibility to use several WGR carousels

Technical Schematics

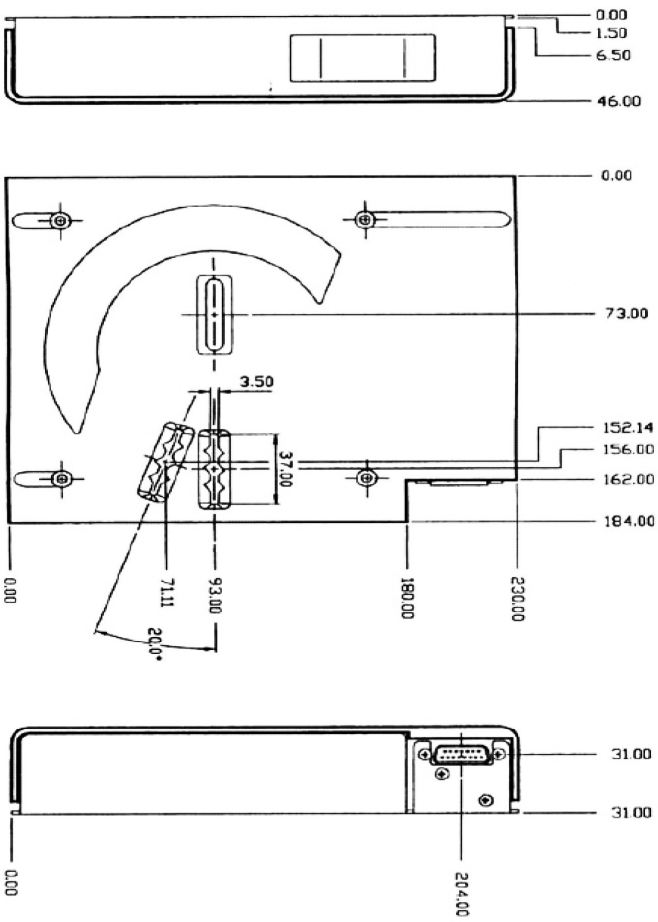

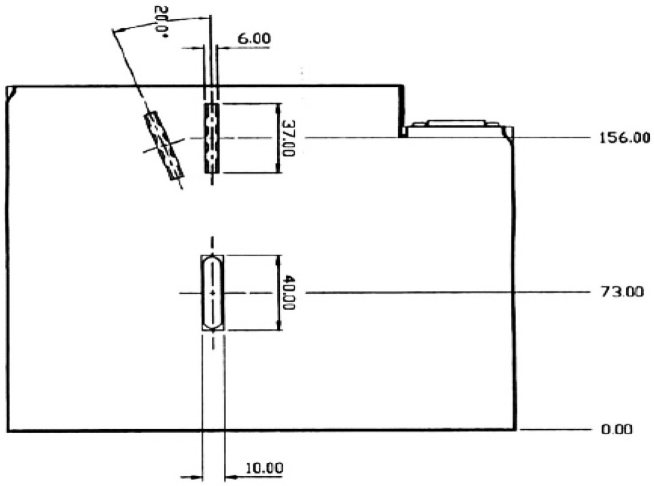

Technical Specifications

Size (L x H x W)	230 X 184 X 46 mm
Coin capacity	50 (53 coin slots)
Coin specifications	Ø 11 ÷ 33.3 mm Thickness max 3.3 mm
Interface	12 C Bus
Voltage	24 Vdc – 5 Vdc 24 Vdc: 1A
Current	5 Vdc: 500 mA
Inputs	TTL level
Outputs	“open collector” active low
Operating temperature	5° ÷ 50 °C