SUZOHAPP

Excel Hopper

Extremely durable and most service friendly casino hopper

Excel Hopper is based in a gearbox system for providing several advantages, such as the maximum torque with minimum power consumption, the unique bayonet motor connection for easy motor replacement and the easy accessible coin exit. It's available with 3 different bowls: the standard bowl, the wide or narrow bowl and then the extended bowl. It guarantees the maximum reliability in coins or tokens handling.

Features

- Payout speed: 450 coins/minute (<31 mm coins), 275 coins/minute (> 31,1 mm)
- Silent operation
- Supplied in 24 Vdc, available in 12 Vdc as option
- Optionally available with wiring harness and AMP plug
- Indirect optic switch read out protected by dust and light cover

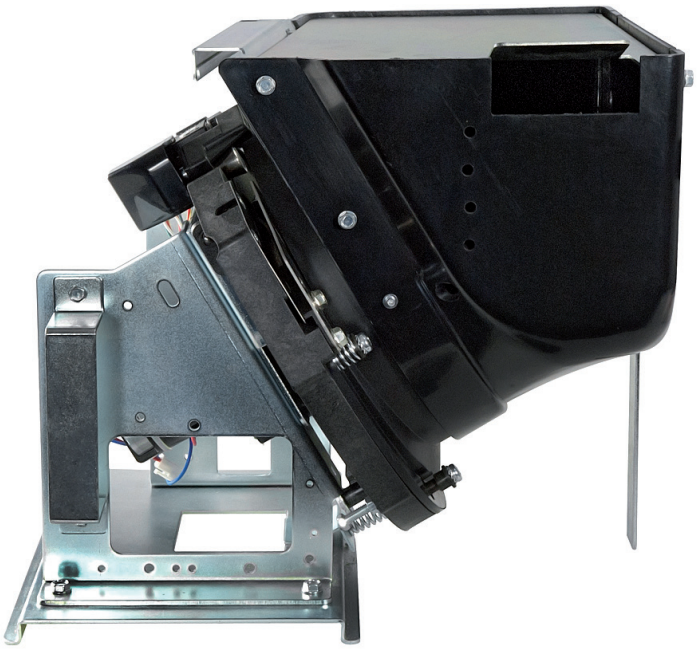

Steel bearings for stable disc rotation

Customisable frame and cups specifications

Technical Schematics

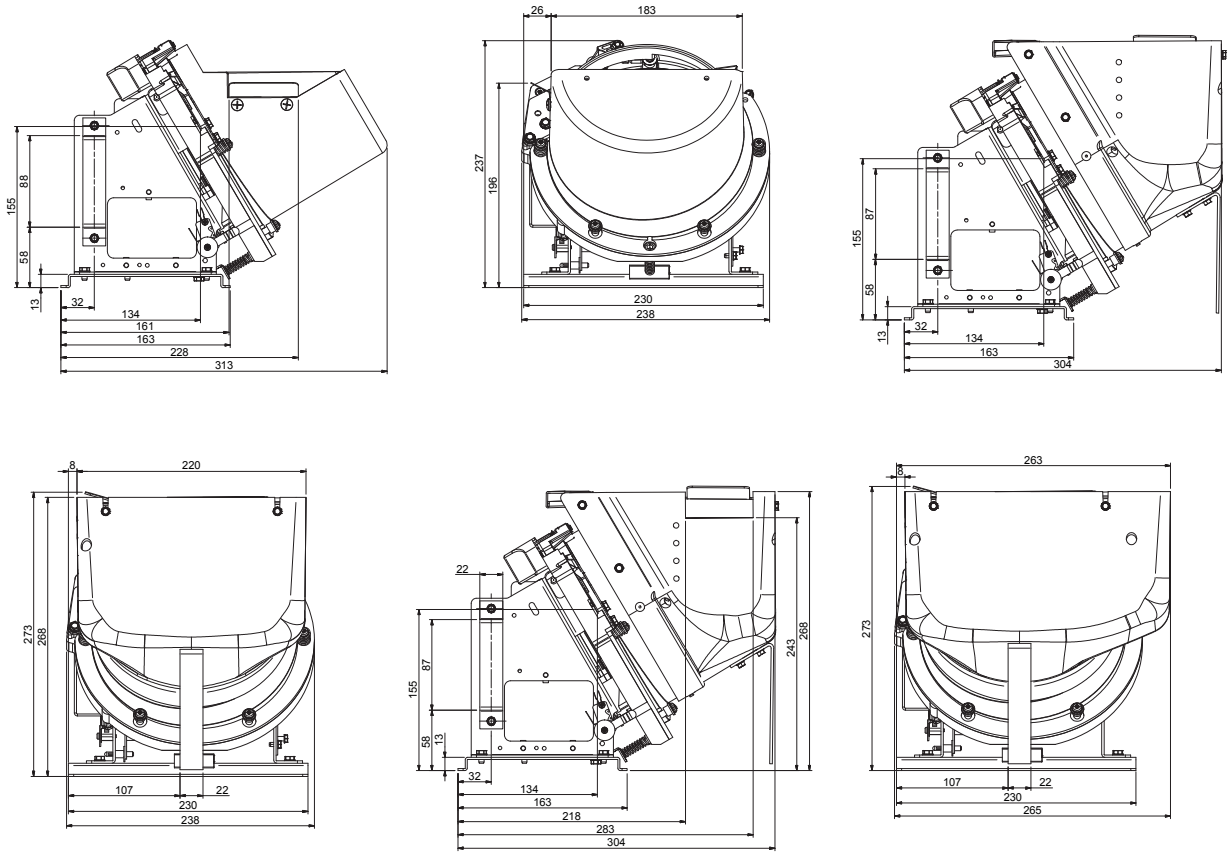

Note: Unit of measure: mm

Versions

- Excel Hopper with standard bowl
- Excel Hopper with wide or narrow bowl
- Excel Hopper with extended bowl

Technical Specifications	Standard bowl	Wide or narrow bowl	Extended bowl
Dimensions (L x H x W)	238 x 237 x 313 mm	238 x 273 x 304 mm	238 x 275 x 424 mm
Dispensing speed	450 coins/min (<31 mm) or 275 coins/min (>31,1 mm)	450 coins/min (<31 mm) or 275 coins/min (>31,1 mm)	450 coins/min (<31 mm) or 275 coins/min (>31,1 mm)
Power supply	24 Vdc or 12 Vdc	24 Vdc or 12 Vdc	24 Vdc or 12 Vdc
Operating temperature	-10° ÷ 60° C	-10° ÷ 60° C	-10° ÷ 60° C

Coin capacity	1 €
Standard bowl	1,000 coins
Wide or Narrow bowl	Wide bowl: 2,700 coins Narrow bowl: 2,500 coins
Extended bowl	1,600 coins